Extracting a blade passage for CFD analysis from scanned/CAD models

Index

1. Purpose 3

2. Scope 3

3. Definitions 3

4. General Procedure – Description 3

5. Methodology, analysis and interpretation of results: 6

6. Acceptance Criteria 9

7. Conclusions 9

8. References 10

9. APPENDIX 11

9.1 Detailed import process using DesignModeler 11

9.2 Following steps for built blade passage 13

1. Purpose

This document defines a procedure to extract a blade passage for CFD analysis from scanned/CAD models.

2. Scope

The procedure is applicable to all pumps for which a 3D model of the impeller is available, and it is necessary to “read” blade angle distribution and/or to create the fluid model of blade passage for meshing and CFD analysis of the hydraulic for the Nova Milanese and La Spezia plants.

Another method that does not need a licensed software inside ANSYS suite is described in SOP-481 (Guidelines for Preparing Impeller CFD Model in CAD).

3. Definitions

CAD	Computer Aided Design
CFD	Computational Fluid Dynamics
DM	Design Modeler (ANSYS software suite)
LBM	Left Mouse Button
MerPlane	Meridonal Plane
NPSHr	Net Positive Suction Head Required
RBM	Right Mouse Button

4. General Procedure – Description

By BladeEditor feature inside DesignModeler (DM) it is possible to generate editable flowpath and blade geometry in order to numerically simulate the original design and then if necessary to modify it for optimization or performance change.

The prerequisites to start the importing procedure is to have a 3D model of the impeller (Creo file, step or iges format, see Figure 1) and in particular:

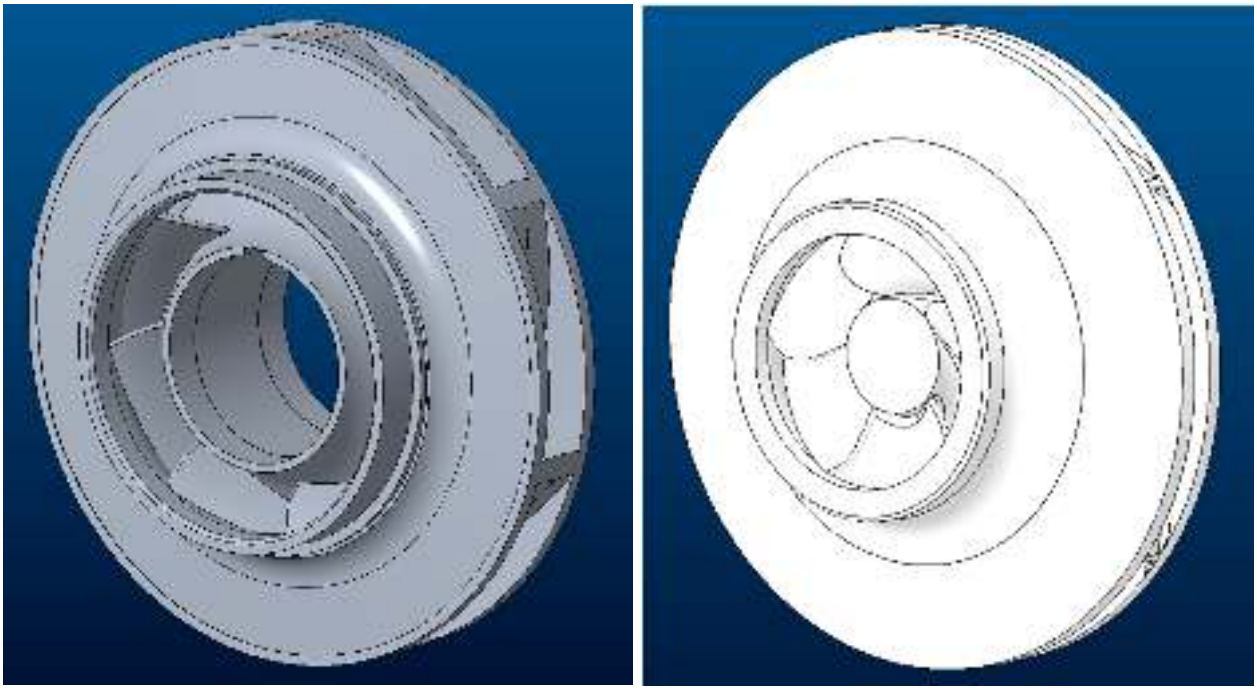

Figure 1. Typical 3D CAD model (on the left) or scan (on the right) of an impeller

- A part containing only the shrouds

Figure 2. 3D model of the shrouds of the impeller

- A part containing only the blades

Figure 3. 3D model of the impeller blades only

In general, with CAD model these two parts can be obtained suppressing relative features and saving a copy of the part in the state of interest. With scanned impeller instead sometimes only blade surfaces are available, and shrouds shall be modelled considering the 2D drawing available. Moreover, rounds between blade and shrouds or at blade exit shall be suppressed, if present (see Figure 4 for reference).

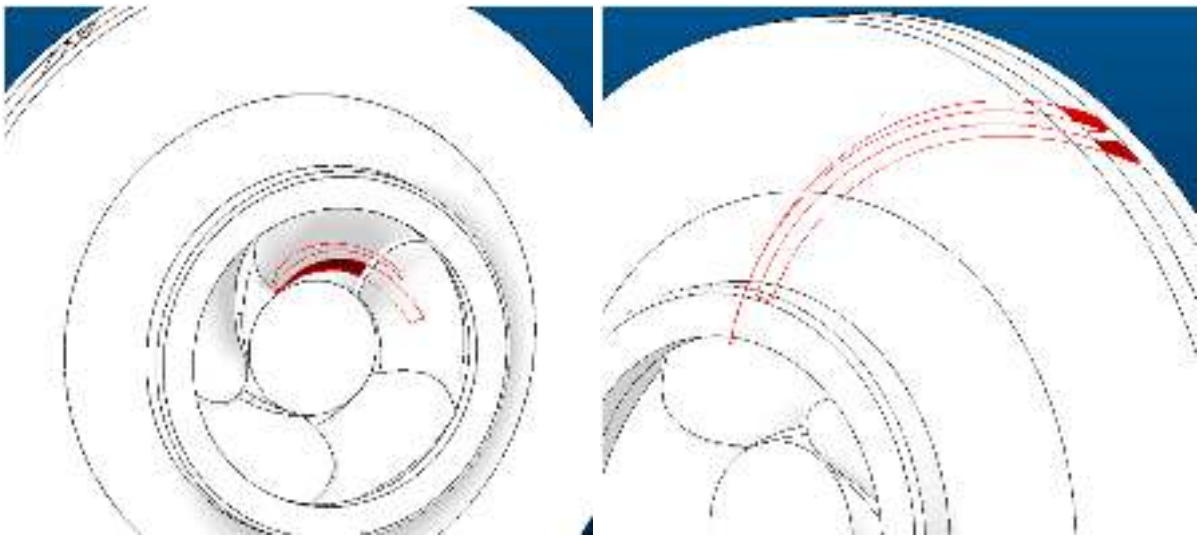

Figure 4. Rounds to be suppressed

In case of double suction impeller without central rib, hub profile will be extended anyway to the external diameter in order to model only half impeller and then a general connection interface will be assigned to this boundary in CFX pre.

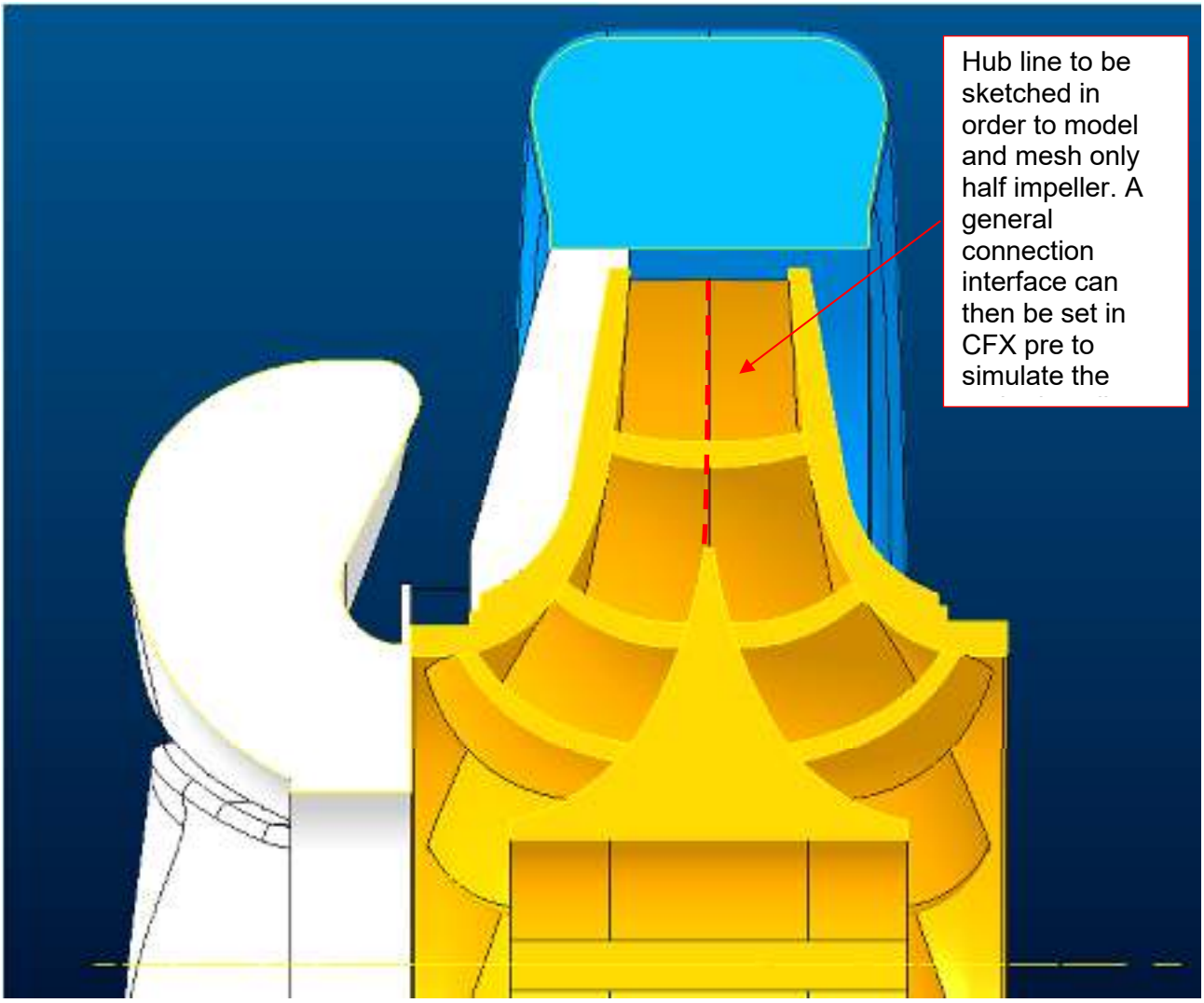

Figure 5. Construction hub line/boundary surface for double suction symmetric impeller

5. Methodology, analysis and interpretation of results:

From the creo part of shrouds it is possible to obtain the meridional section of the impeller. The following figure shows criteria by Gulich [1] that can be used as rule of thumb to check existing shape of shroud curve or to redefine it for optimization. It is defined by a radius and two inclined (or not) segments, one at impeller entry and one to achieve impeller outer diameter (D_2). It is then possible to

get the hub line considering a linear, parabolic or cubic development of the flow area in the impeller. Indicative relations between the main geometrical dimensions of the meridional section are stated in Figure 6 and it shows also a recommended shape for the leading edge.

For the blades profile it is possible to use several formulations, NACA Four-digit Wing Sections [2], “ESSE” which is a 3rd order polynomial definition or a manual setting of the meanline and thickness distributions taking into account of blade loading.

See relative procedure of impeller design for additional details.

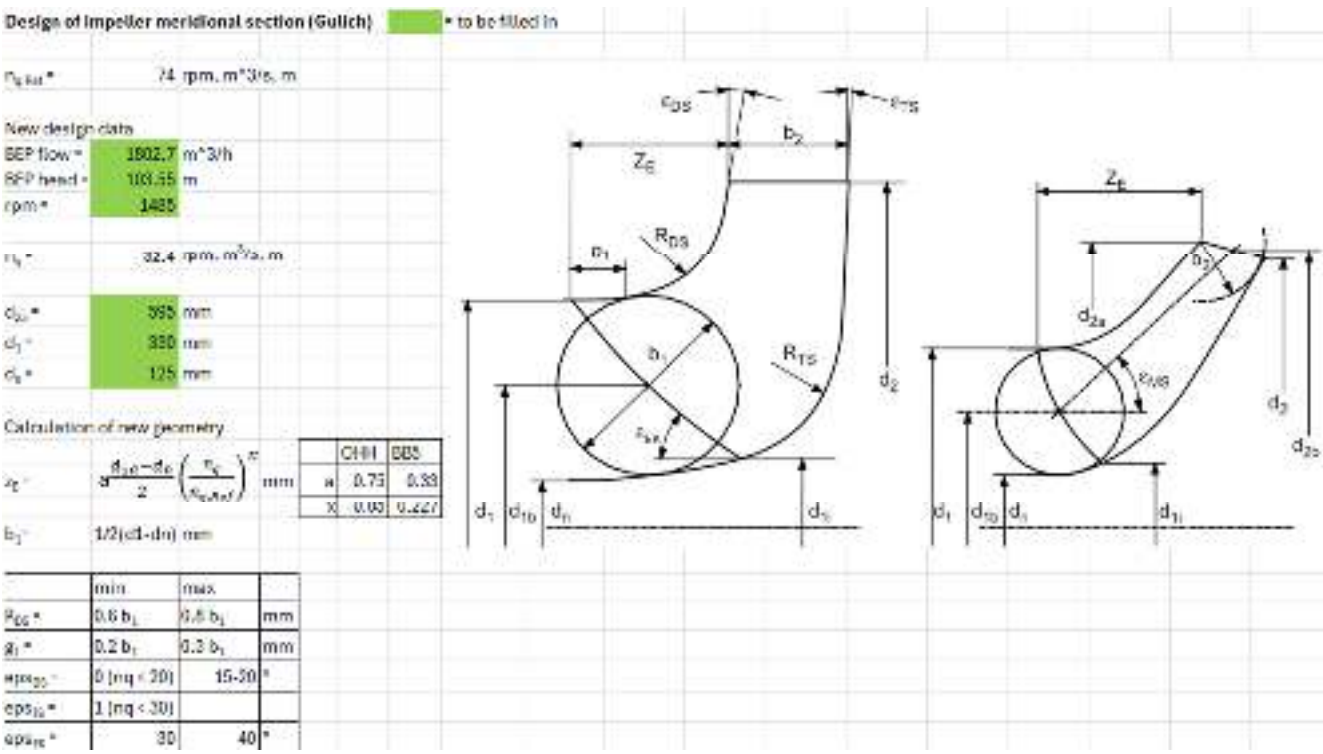

Figure 6. Design parameters for the meridional section of the impeller. Left: Radial impeller, right: semi-axial impeller [1]

The last piece of information necessary to define the impeller blades is the thickness distribution. Important design criteria to be considered are:

- Have thinner blades at leading edge (full round or ellipse shaping shown on Figure 7) in order to guarantee good NPSHr performance, than the thickness can increase until a maximum at 50% of meridional length M and it can decrease towards trailing edge to reduce slipstream

- Have thicker profiles at hub with respect to shroud for manufacturing reasons (consider a slant of about 0.5-1 mm), because making the pattern you need to extract the pattern of the blade from the sand through the hub

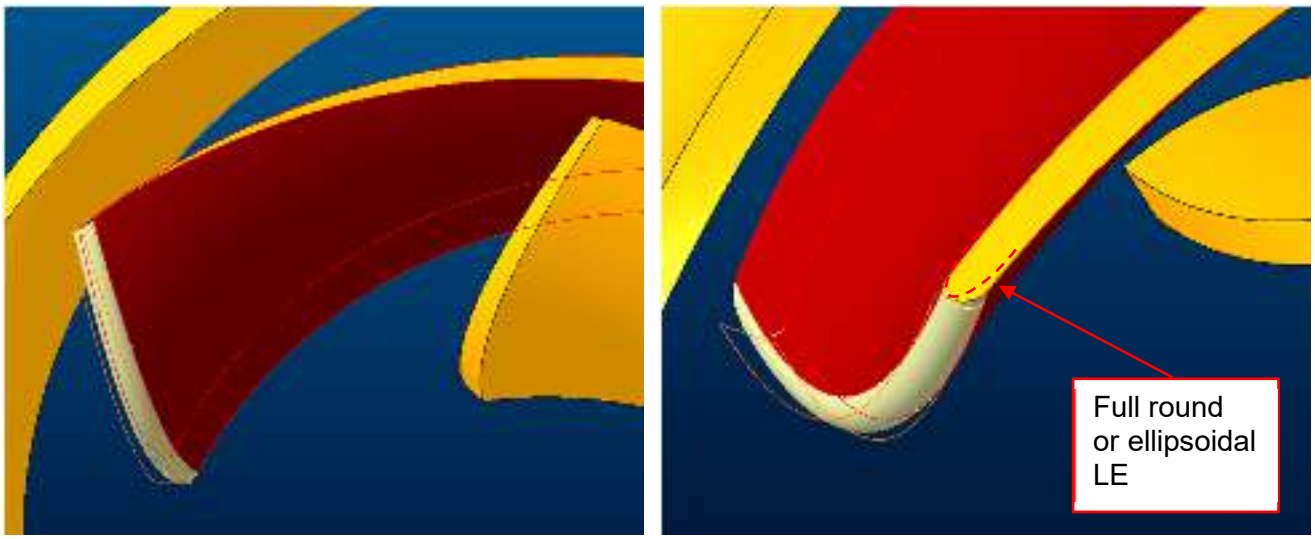

Figure 7. LE edge shape

Figure 8 shows a typical thickness distribution (average value 5-6 mm) for the blades of a common size impeller (D_2 = 300 mm) in a centrifugal pump rotating at 3000 rpm. Higher thickness (10-12 mm) shall be used for larger impeller diameter (up to 600-700 mm).

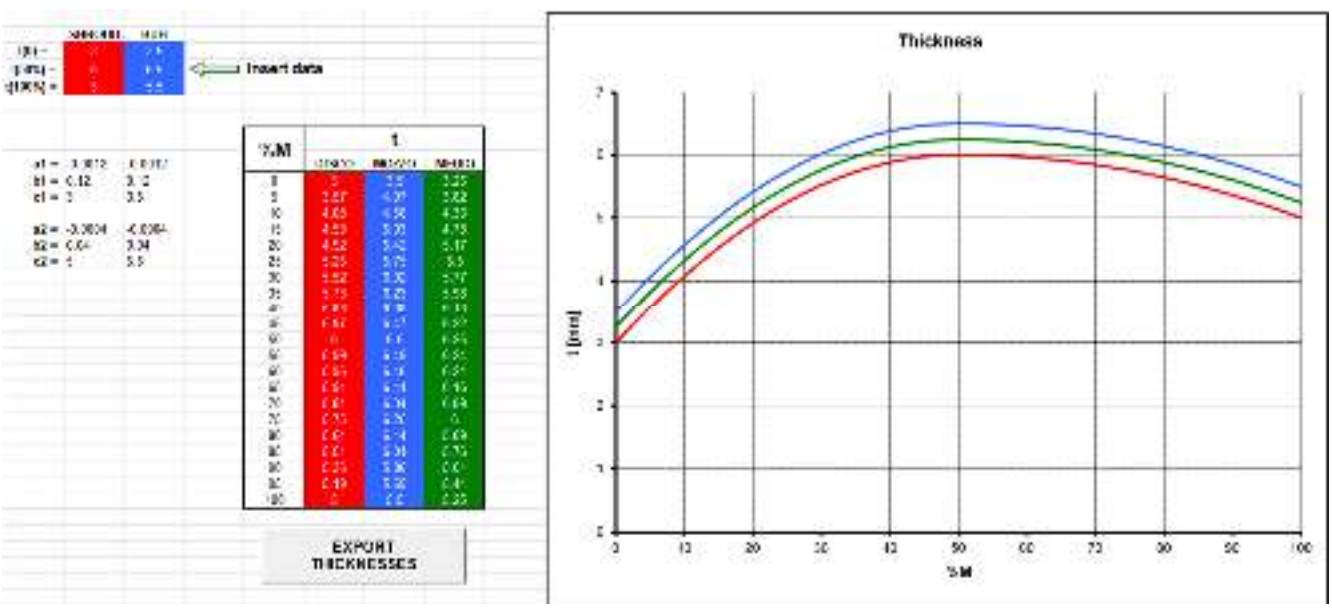

Figure 8. Typical thickness distribution of blades at hub, shroud and mid span for a common impeller size (D_2 = 300 mm) of a centrifugal pump rotating at 3000 rpm

6. Acceptance Criteria

At the end of the import process detailed in appendix, it is important to overlap the original CAD of the impeller and the re-built geometry in order to check for deviations. Common misalignments regard the leading edge shape and then it is difficult to capture thickness distribution, little manual adjustments may be necessary. Typical acceptable overlapping between original and re-built geometries are shown in Figure 9 and they fall within casting tolerances.

7. Conclusions

This procedure allows to pass from the 3D model of an impeller to its fluid domain passage in order to “read” all its dimensions/angles and/or to mesh it and go for a CFD analysis. Another approach without the use of ANSYS DesignModeler is available with SOP-481.

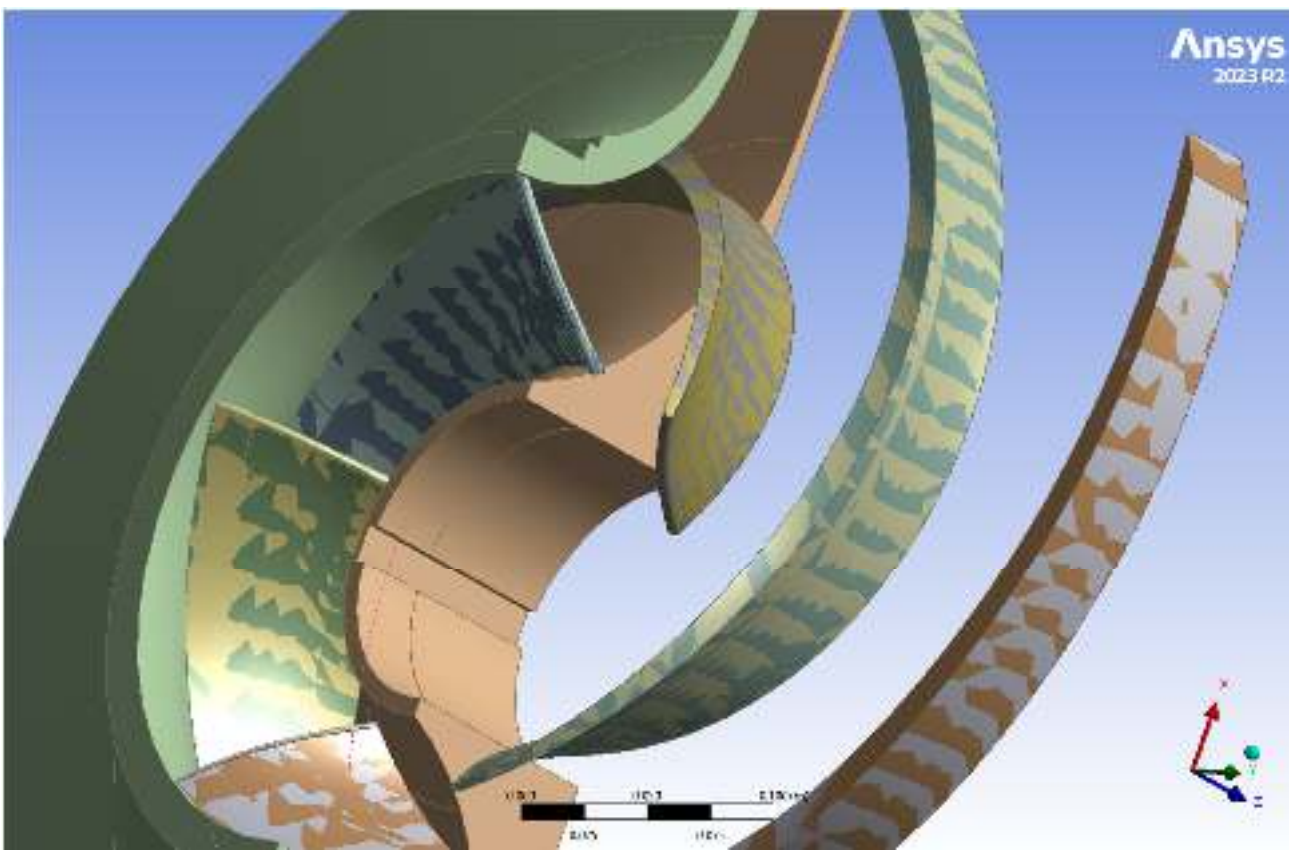

Figure 9. Typical overlapping between original and re-built geometries of an impeller

8. References

[1] Centrifugal Pumps, Fourth Edition by Johann Friedrich Gulich, Springer Nature Switzerland AG 2020

[2] Theory of Wing Sections, by Ira H. Abbott and Albert E. Von Doenhoff, Dover Publications, Inc. New York

[3] ANSYS BladeModeler training within 2016-2017 course on CFD simulation software by Enginsoft

[4] SOP-481

[5] SOP-490

9. APPENDIX

9.1 Detailed import process using DesignModeler

After starting DM inside ANSYS Workbench the following steps must be followed:

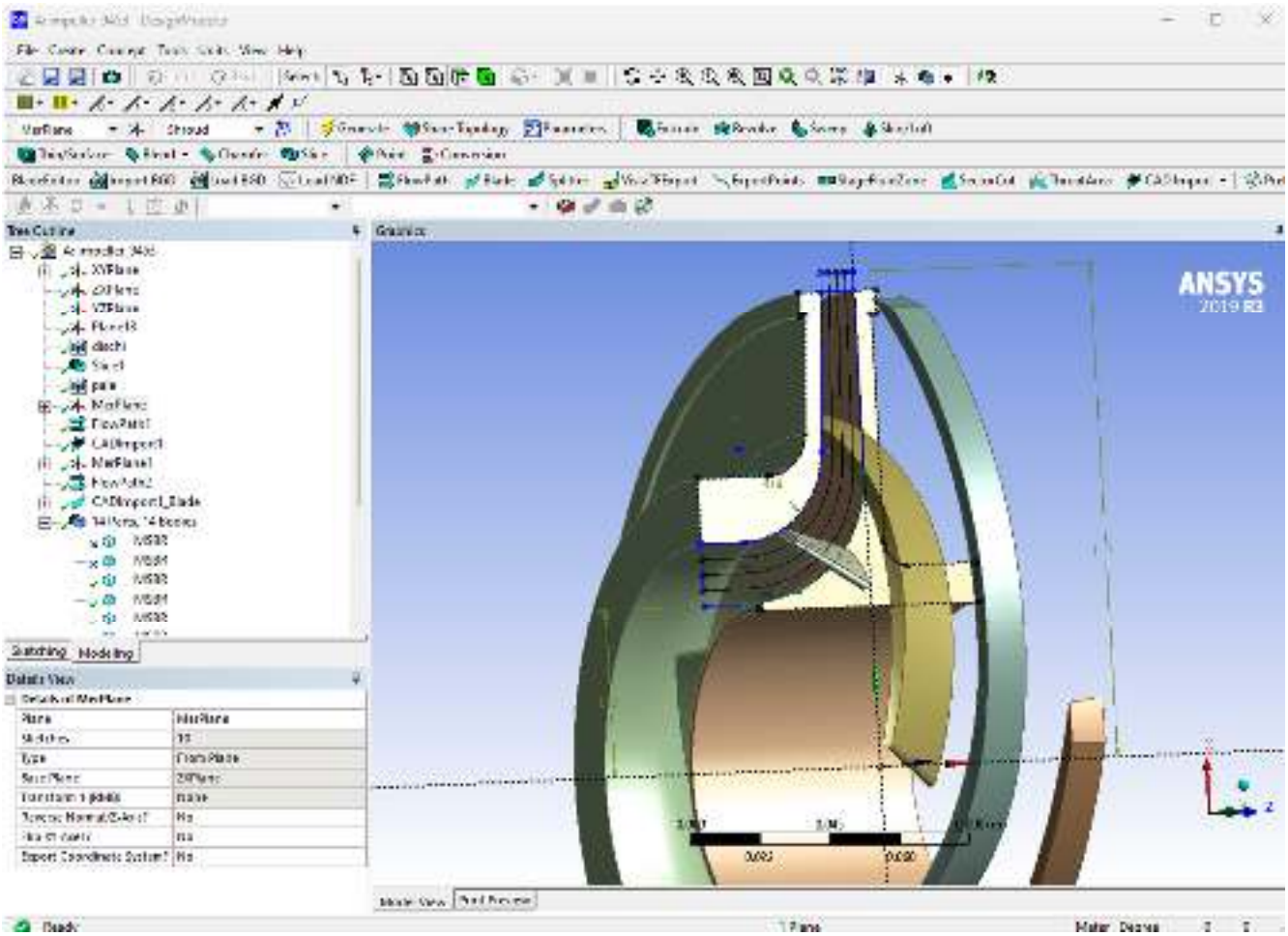

Figure 10. DM overview with design tree on the left

- Import (File > Import External Geometry File…) the two parts verifying that the importing plane is XY and then click Generate button
- Remove the tick of the option View > Frozen Body Transparency
- Create > Slice only the two shroud bodies and hide two halves of the impeller shrouds in order to see a section of the meridional channel from global plane ZX. Hub and shroud profiles shall lay on negative X coordinates

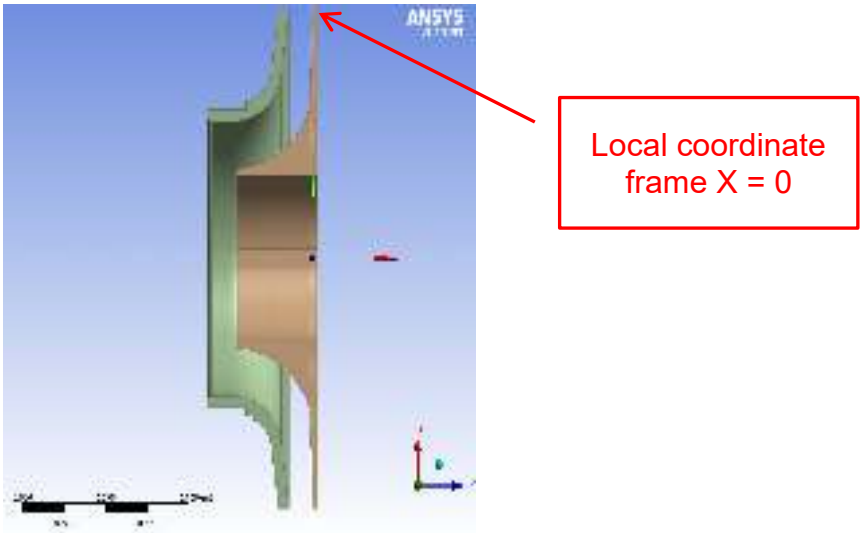

- Create > New Plane called “MerPlane” for example and Generate

- Right mouse button (RBM) click on generated new plane Insert > Sketch Projection and select the two shroud faces from which to track hub and shroud profiles

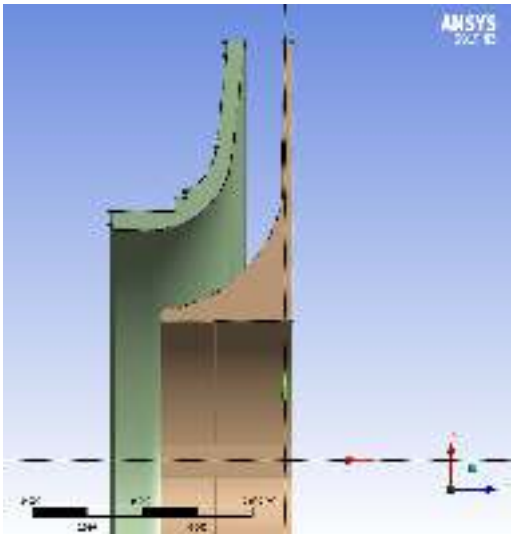

- New Sketch button after selecting MerPlane on model tree, name it “Hub”, go to Sketching tab and click Modity > Duplicate, select the hub curve to be copied by left mouse button (LMB), then RMB > Duplicate Selection and go back to modeling tab

- Redo the same operations for shroud profile, complete the two sketches with new lines if necessary

- New Sketch button in the same plane, rename it “Inlet” and pass from Modeling tab to Sketching in order to Draw > Line from two points and return to Modeling tab

- Redo point 4.8 actions for “Outlet”

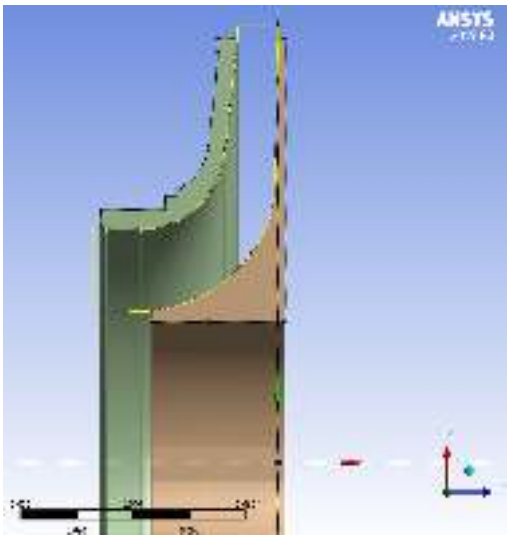

- Select Flowpath feature, specify the four necessary sketches and Generate
- RMB on Layer Details to add other layers (0, 0.25, 0.5, 0.75, 1) and Generate

- Use CAD Import > Create CADImport Feature, Insert requested data of the pump and specify the surfaces of the already imported blades, then Generate

9.2 Following steps for built blade passage

At this point it is already possible to pass this geometry to Turbogrid connecting the two blocks inside Workbench (Figure 11) in order to go on with the hexa mesh creation (see SOP-490).

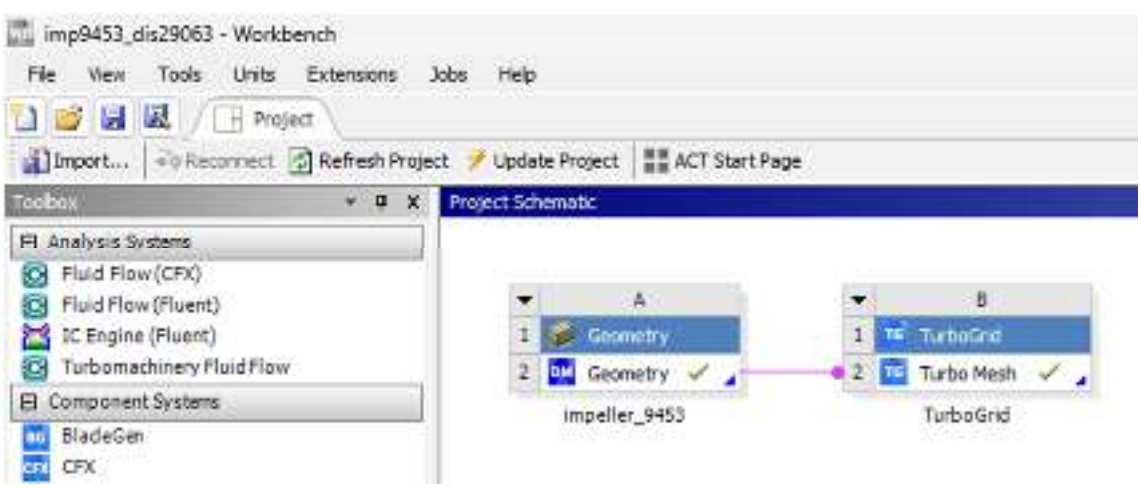

Figure 11. ANSYS Workbench workflow

Otherwise, it is possible to use the feature CAD Import > Write Script (or Write NDF) which creates a file .js (or .ndf). This file can be used in a new DesignModeler with the function File > Run Script (or Load NDF) and automatically the blades are modelled with editable BledeEditor entities for geometry modifications as needed. If this feature is used in the same DM of the import, it is possible to see the original geometry overlapped to the rebuilt one and to evaluate if the deviation is acceptable.

Within the CADImport it is possible also to visualize and save in a text file (.ha) the beta angle distribution (and thickness) at various span of the impeller meridional channel.

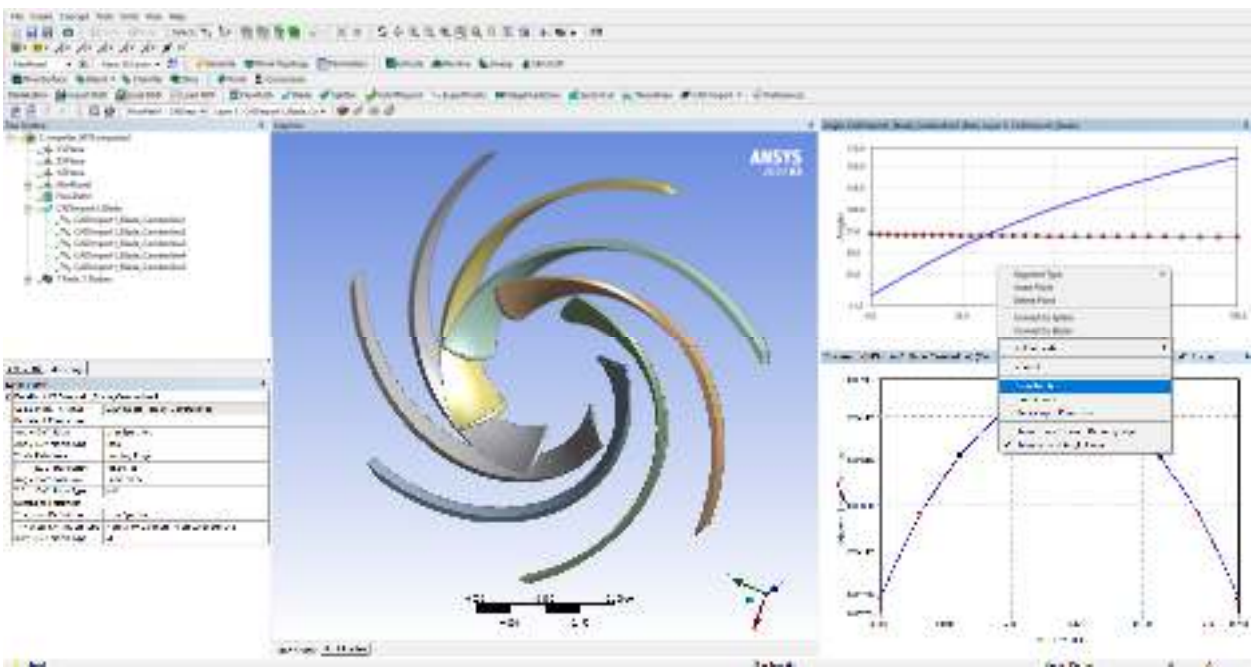

Figure 12. Final Result of the Import Process